SALES DRAWING

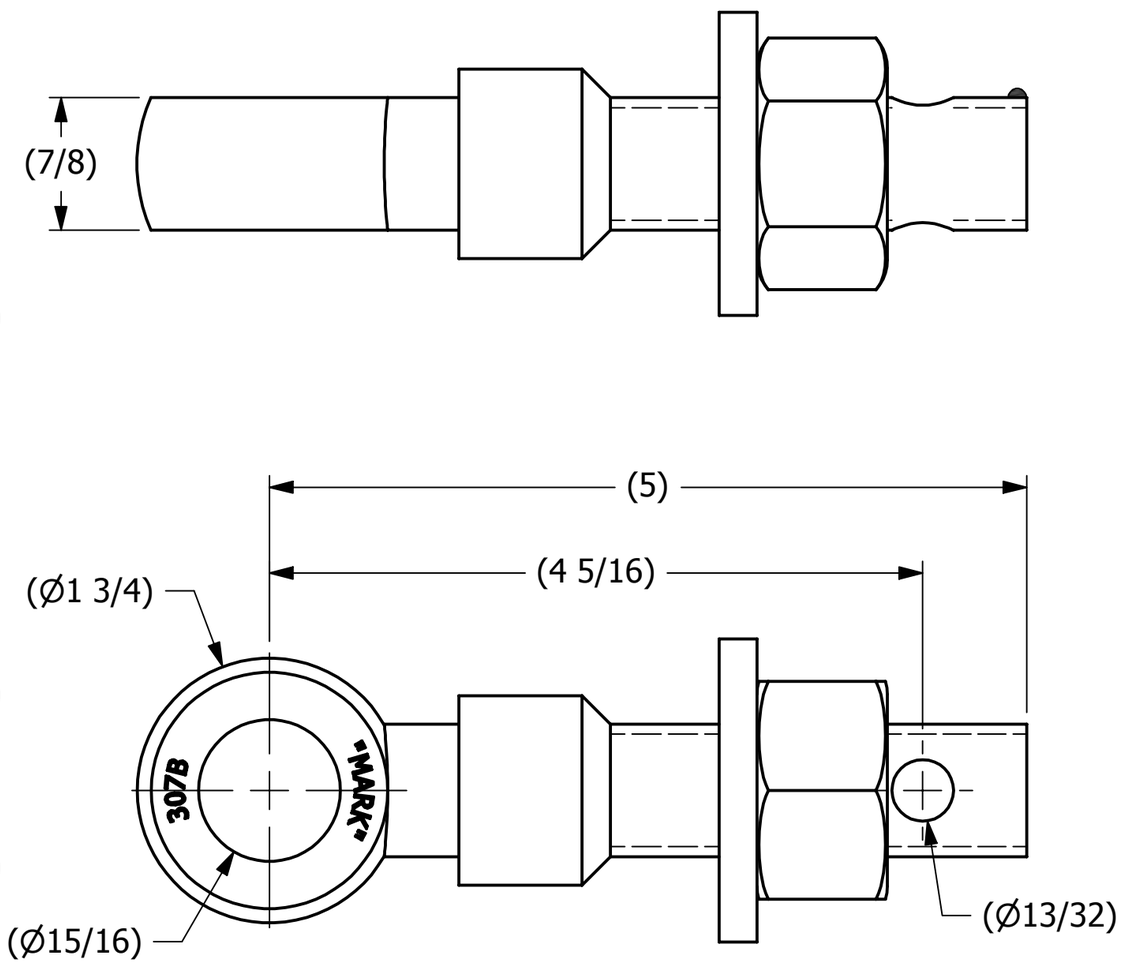

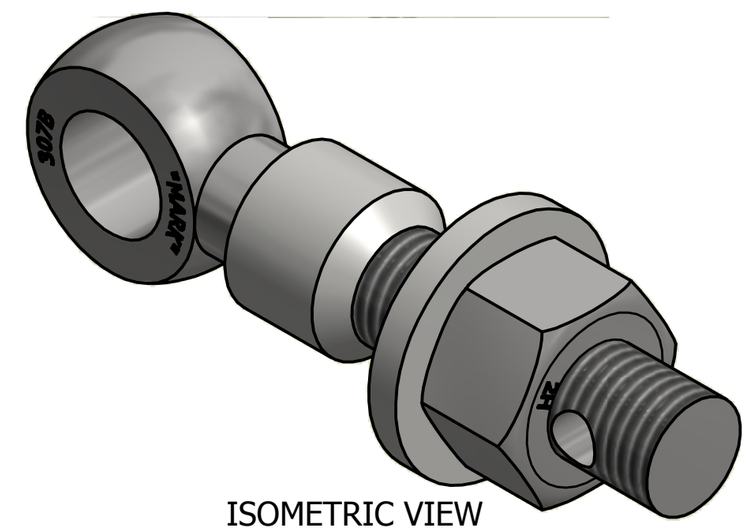

ISOMETRIC VIEW

NOTE:
JET LUBE(PFPE GREASE) APPLIED TO WORKING THREAD AREA, THE BOTTOM FACE OF THE NUT, AND THE TOP FACE OF THE WASHER.

REV	BY	DATE	DESCRIPTION
B	CHL	6-18-10	REPLACED COLLAR78S4T3 W/COLLAR78S3T3
A	REH	2-12-10	NEW PART ADDED TO SYSTEM

UNLESS OTHERWISE SPECIFIED DIMENSIONAL TOLERANCES
FRACTIONAL: ±1/16
X.XX: ±.03
X.XXX: ±.015
ANGULAR: ±1°
DEBURR ALL SHARP EDGES. ALL MACHINED SURFACES TO HAVE A 125 RMS FINISH UNLESS NOTED OTHERWISE.
THIRD ANGLE PROJECTION

DRAWN BY:	REH
CHECKED BY:	PJG
PROTOTYPE BY:	REH
PROTOTYPE DATE:	2/12/2010
APPROVED FOR PRODUCTION BY:	PJG
PRODUCTION DATE:	2/12/2010

SALCO PRODUCTS, INC.

PART NAME: EYEBOLT ASSEMBLY 7/8"X5"

MATERIAL: CARBON STEEL

PROJECT #: WAG0775 | SHEET #: 1 OF 1 | SCALE: 1:1

DRAWING #: B28168 | PART #: EB785XHFTATC3L

THIS PRINT, PROPERTY OF SALCO PRODUCTS INC., CONTAINS PROPRIETARY INFORMATION AND MUST NOT BE COPIED, REPRODUCED, OR USED DETRIMENTALLY TO OUR INTEREST.